Fold Bed Dimensions

#7972 Full
#7973 Twin

Manufactured by

kd frames

394 Dairy Pak Rd. • Athens, GA 30607
kdframes.com • alan@kdframes.com

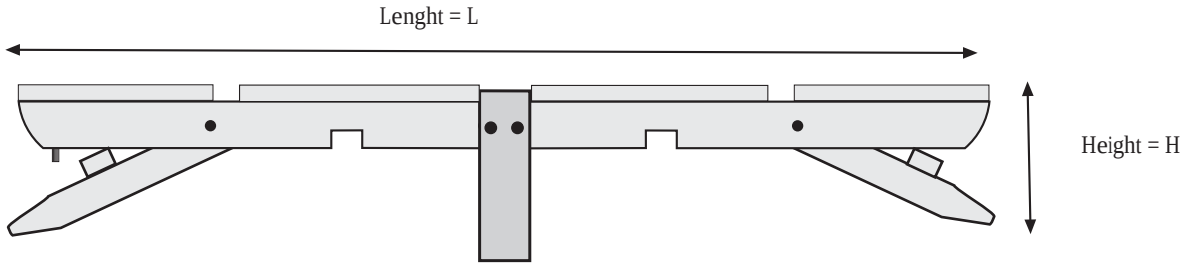

SIDE VIEW

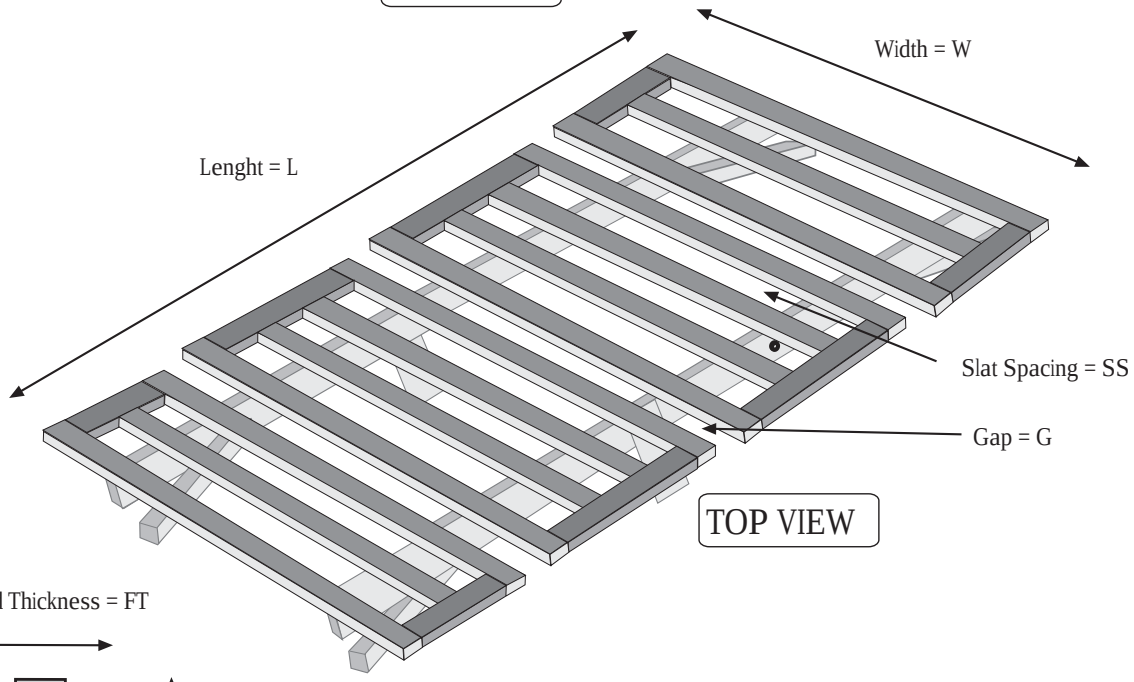

TOP VIEW

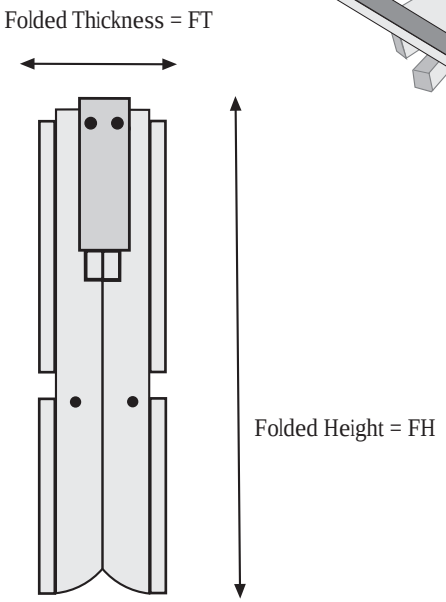

SIDE VIEW FOLDED

DIMENSIONS (in inches)

	H	W	L	FT	FH	SS	G
Full	10	52	74	8	39	3.7	3.5
Twin	10	37	74	8	39	3.7	3.5